ACCUSHOT PRO™

SCOPE SPECIFICATIONS

ENGLISH (**EN**) | DEUTSCH (**DE**) | FRANÇAIS (**FR**) | ESPAÑOL (**ES**) | ITALIANO (**IT**)

▶ Specifications

EN Specifications	DE Technische Daten	FR Caractéri
Magnification	Vergrößerung	Grossissement
Focal Plane	Absehenebene	Plan focal
Reticle	Absehen	Réticule
Tube Diameter	Mittelrohrdurchmesser	Diamètre du tub
Objective Diameter	Objektivdurchmesser	Diamètre de lent
Eye Relief	Augenabstand	Dégagement ocu
Exit Pupil	Austrittspupille	Pupille de sortie
Linear FOV @ 100 yds	Lineares Sehfeld auf 100 Yds	FOV (Champ de
Linear FOV @ 100 m	Lineares Sehfeld auf 100 m	FOV (Champ de
Angular FOV	Sehfeldwinkel auf 100 m	Angulaire FOV (0
Light Transmission	Lichttransmission	Transmission de
Elevation Travel	Höhenverstellbereich	Course d'élévati
Windage Travel	Seitenverstellbereich	Course au vent
Travel Per Revolution	Vorschub pro Umdrehung	Course par révol
Click Value	Verstellwert je Click	Valeur de clic
Diopter	Dioptrienverstellung	Dioptrie
Parallax	Parallaxeausgleich	Parallaxe
Length	Länge	Longueur
Weight	Gewicht	Poids
Caliber Rating	Kaliberbewertung	Classification de
Waterproof	Wasserbeständigkeit	Étanche à l'eau
Fogproof	Stickstoffbefüllt	Anti-brouillard
Functional Temperature	Funktionstemperatur	Température de
Illumination	Beleuchtung	Illumination
Battery	Batterie	Batterie

ISTIQUES	ES ESPECIFICACIONES	IT SPECIFICHE TECNICHE
	Aumento	Ingrandimento
	Plano focal	Piano focale
	Retículo	Reticolo
e	Diámetro del tubo	Diametro del tubo
tille d'objectif	Diámetro del objetivo	Diametro obiettivo
ulaire	Alivio ocular	Apertura oculare
	Pupila de salida	Distanza della pupilla di uscita
vue) @ 100 verges	FOV Lineal a 100 yardas	FOV (campo visivo) @ 100 iarde
vue) @ 100 m	FOV Lineal a 100 m	FOV (campo visivo) @ 100 m
Champ de vue)	FOV Angular	Angolare FOV
e lumière	Transmisión de la luz	Trasmissione di luce
on	Recorrido de altura	Escursione di elevazione
	Recorrido de deriva	Escursione di deriva
lution	Avance por revolución	Avanzamento per rivoluzione
	Valor del clic	Click Value
	Dioptría	Diottria
	Paralaje	Parallasse
	Longitud	Lunghezza
	Peso	Peso
e calibre	Clasificación de calibre	Classificazione del calibro
	A prueba de agua	Impermeabile
	A prueba de niebla	Antinebbia
fonctionnement	Temperatura de funcionamento	Temperatura operativa
	Iluminación	Illuminazione
	Batería	Batteria

AS6 1-6X24	
AS601FA1	**AS601FB1**
1X - 6X	1X - 6X
FFP	FFP
A1 MOA	B1 BDC
34 mm	34 mm
24 mm	24 mm
3.54” (90 mm)	3.54” (90 mm)
9.5 mm - 4 mm	9.5 mm - 4 mm
115.5’ - 18.9’	115.5’ - 18.9’
38.5 m - 6.3 m	38.5 m - 6.3 m
21.8° - 3.6°	21.8° - 3.6°
90%	90%
Up 60 MOA, Down 40 MOA	Up 60 MOA, Down 40 MOA
Right 20 MOA, Left 20 MOA	Right 20 MOA, Left 20 MOA
40 MOA	40 MOA
1/2 MOA	1/2 MOA
-3D to +2D	-3D to +2D
100 yds (91.4 m)	100 yds (91.4 m)
10.04” (255 mm)	10.04” (255 mm)
22.7 oz (643 g)	22.7 oz (643 g)
.338 LAPUA Magnum	.338 LAPUA Magnum
IPX7	IPX7
Nitrogen Gas Purged	Nitrogen Gas Purged
-40°F to +160°F (-40°C to +70°C)	-40°F to +160°F (-40°C to +70°C)
Red / Green (10 Settings Each)	Red / Green (10 Settings Each)
CR2032 3V	CR2032 3V

AS3 3-9X36	AS4 3-12X42
AS303FA2	**AS403FA2**
3X - 9X	3X - 12X
FFP	FFP
A2 MOA	A2 MOA
34 mm	34 mm
36 mm	42 mm
3.54” (90 mm)	3.43” (87 mm)
12 mm - 4 mm	10 mm - 3.5 mm
38.8’ - 12.9’	38.8’ - 9.7’
12.9 mm – 4.3 mm	12.9 mm – 3.2 mm
7.4° - 2.47°	7.4° - 1.85°
90%	90 %
Up 60 MOA, Down 40 MOA	Up 60 MOA, Down 40 MOA
Right 10 MOA, Left 10 MOA	Right 10 MOA, Left 10 MOA
20 MOA	20 MOA
1/4 MOA	1/4 MOA
-3D to +2D	-3D to +2D
10 yds (9.14 m) - ∞	10 yds (9.14 m) - ∞
9.39” (238.5 mm)	10.08” (256 mm)
21.9 oz (621 g)	24.7 oz (701 g)
.338 LAPUA Magnum	.338 LAPUA Magnum
IPX7	IPX7
Nitrogen Gas Purged	Nitrogen Gas Purged
-40°F to +160°F (-40°C to +70°C)	-40°F to +160°F (-40°C to +70°C)
Red / Green (8 Settings Each)	Red / Green (8 Settings Each)
CR2032 3V	CR2032 3V

ACCUSHOT PRO™

LEAPERS®

NORTH AMERICA - HEADQUARTERS
32700 Capitol Street
Livonia, MI 48150 U.S.A.
Tel: (734) 542-1500
Fax: (734) 542-7095
office@leapers.com
www.leapers.com

EUROPE
Am Bahndamm 7
63683 Ortenberg, Germany
Tel: +49 (0) 6041 - 969686 0
Fax: +49 (0) 6041 - 969686 66
info@utgeurope.com
www.utgeurope.com

ASIA
No.36, Qunyi Rd., Zhunan Township
Miaoli County 350, Taiwan (R.O.C)
Tel: +886 (0) 37 580333
Fax: +886 (0) 37 580337
conseil@utg-taiwan.com
www.utgtaiwan.com

ACCUSHOT PRO™ MU004012411
SCOPE SPECIFICATIONS

▶ Dimensions

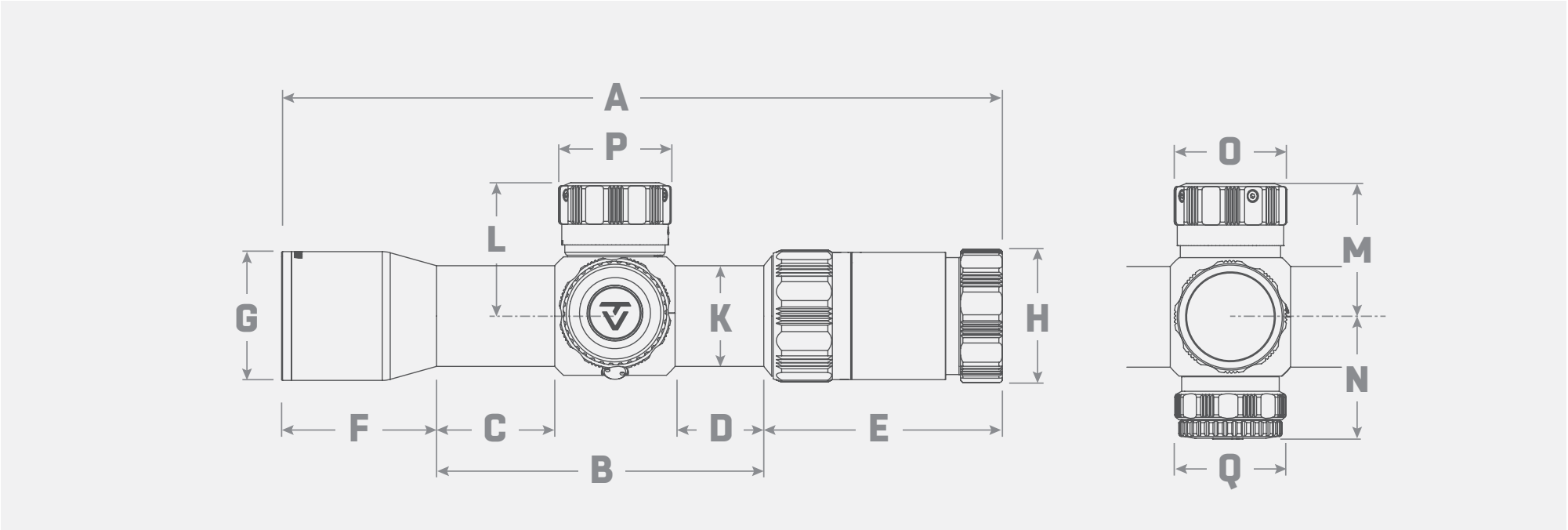

(A) Overall Length

(B) Total Mounting Space

(C) Front Mounting Space

(D) Rear Mounting Space

(E) Ocular Tube Length

(F) Objective Tube Length

(G) Objective Diameter

(H) Eyepiece Diameter

(K) Tube Diameter

(L) Elevation Turret Height

(M) Windage Turret Height

(N) Parallax / Illumination Turret Height

(O) Windage Turret Diameter

(P) Elevation Turret Diameter

(Q) Parallax / Illumination Turret Diameter

	AS6 1-6X24 FFP	AS3 3-9X36 FFP	AS4 3-12X42 FFP
A	10.00" (255 mm)	9.39" (238.5 mm)	10.1" (256 mm)
B	6.57" (167 mm)	4.37" (111 mm)	4.37" (111 mm)
C	3.31" (84 mm)	1.57" (40 mm)	1.42" (36 mm)
D	1.65" (42 mm)	1.18" (30 mm)	1.34" (34 mm)
E	3.46" (88 mm)	2.95" (75 mm)	3.03" (77 mm)
F	-	2.07" (52.5 mm)	2.68" (68 mm)
G	1.34" (34 mm)	1.71" (43.5 mm)	2.01" (51 mm)
H	1.77" (45 mm)	1.69" (43 mm)	1.77" (45 mm)
K	1.34" (34 mm)	1.34" (34 mm)	1.34" (34 mm)
L	1.81" (46 mm)	1.77" (45 mm)	1.81" (46 mm)
M	1.81" (46 mm)	1.77" (45 mm)	1.81" (46 mm)
N	1.65" (42 mm)	1.61" (41 mm)	1.61" (41 mm)
O	1.5" (38 mm)	1.5" (38 mm)	1.5" (38 mm)
P	1.5" (38 mm)	1.5" (38 mm)	1.5" (38 mm)
Q	1.5" (38 mm)	1.5" (38 mm)	1.5" (38 mm)

▶ RETICLES

B1 BDC

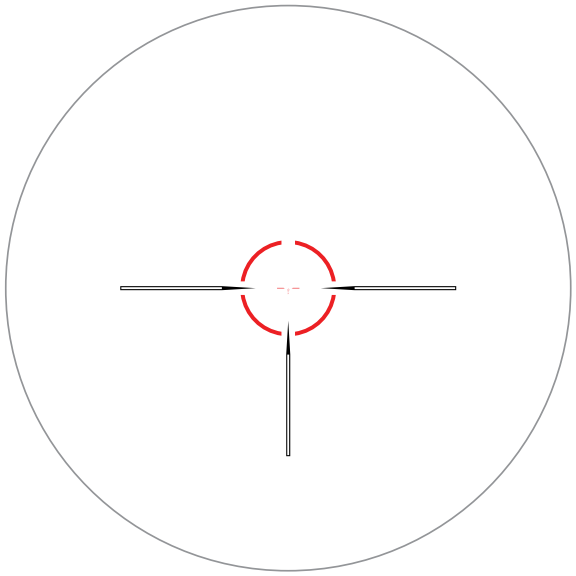

A1 MOA

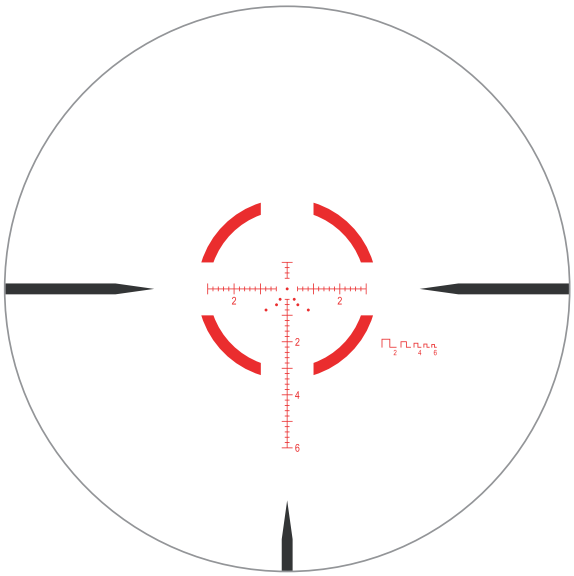

A2 MOA

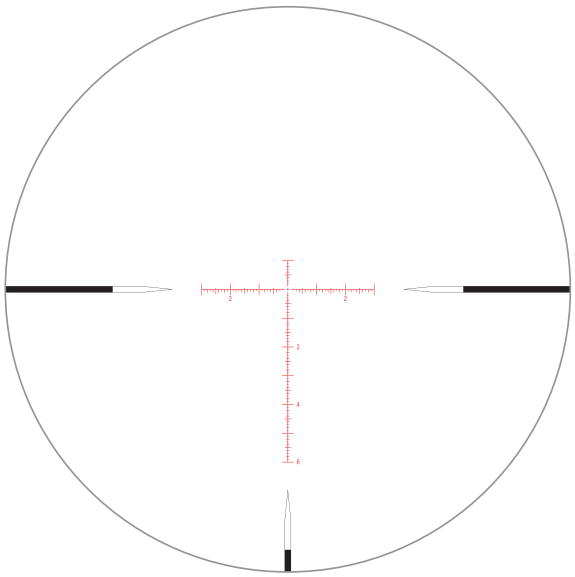

THE BEST NEVER REST LIFETIME WARRANTY

LEAPERS® warrants that all products conform to published specifications and are free from defects in material and workmanship. LEAPERS® will repair or replace a defective product for the duration of the product's life span. Verification through a Return Authorization (RA) number is required. If the product is discontinued, credit in the amount of the product's MSRP may be applied toward a replacement item.

NOTE: our warranty does not extend to theft, loss, deliberate, accidental, or cosmetic damages, negligence, misuse, disassembly beyond normal maintenance, or any unauthorized repair or alteration.

Please take caution when purchasing products on the secondary market. A LEAPERS® product that is purchased secondhand is always at the buyer's own risk. We cannot guarantee that the product you purchased is genuine without a serial number or complete with all necessary parts unless returned and inspected.

LEAPERS® reserves the right to confiscate counterfeit products based on our intellectual property rights and usage and always recommends purchasing LEAPERS® products through reputable retailers

Please feel free to call us at ***(734) 542-1500*** or email us at ***office@leapers.com***. You may submit a customer service inquiry via our website at ***www.leapers.com/contact*** or a warranty request at ***www.leapers.com/support/lifetime-warranty***.

LEAPERS LIFETIME WARRANTY